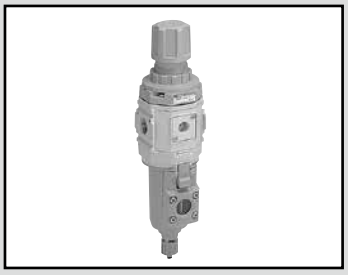

Filter and regulator Flame-resistant series

W3000/W4000/W8000-G4 Series

New Series of 5 μm element for dust removal, and 0.3 μm element for tar removal.

● Port size: 1/4 to 1

JIS symbol

RoHS CAD

Specifications

Item		W3000-G4	W4000-G4	W8000-G4
Working fluid		Compressed air		
Max. working pressure	MPa	1.0 (≈150 psi, 10 bar) (*1, *2)		
Proof pressure	MPa	1.5 (≈220 psi, 15 bar)		
Ambient / fluid temperatures	°C	5 (41°F) to 60 (140°F)		
Filtration rating	μm	5 or 0.3		
Set pressure	MPa	0.05 (≈7.3 psi, 0.5 bar) to 0.85 (≈120 psi, 8.5 bar)		
Pressure relief		With relief mechanism		
Drain capacity	cm^3	45	80	80 (*3)
Port size	Rc,NPT,G	1/4, 3/8 (1/2 uses an adaptor)	1/4, 3/8, 1/2 (3/4 uses an adaptor)	3/4, 1 (1 1/4 uses an adaptor)
Weight	kg	0.72	1.08	2.16
Standard specifications		Exterior: Flame-resistant material, metal bowl		

*1: In the case of "F" with auto-drain, the min. working pressure of auto-drain is 0.1 MPa.
Air is purged with initial drainage until pressure reaches 0.1 MPa.
*2: In the case of "F1" with auto-drain, the min. working pressure of auto-drain is 0.15 MPa.
*3: Up to 170 cm^3 is stored with the manual drain cock only.

Option weight

* Add to the weight of the standard accessories.

Unit: kg

Code	Drain discharge				Bowl material	Press.gauge	Pipe adaptor set					
	F	F1	FF	FF1	M	T*	A8*W	A10*W	A15*W	A20*W	A25*W	A32*W
W3000-G4	0.02	0.02			0	0	0.16	0.16	0.16			
W4000-G4	0.02	0.02			0	0	0.16	0.16	0.16	0.16		
W8000-G4	0.02	0.02	0.02	0.02	0	0				0.53	0.53	0.53

Code	Attachment			
	BW	B3W	G49P	G59P
W3000-G4	0.17	0.07	0.086	0.115
W4000-G4	0.21	0.11	0.086	0.115
W8000-G4	0.36		0.086	0.115

How to order

W3000 - 8 ◯ - G4 - T8 - ◯ - A8W G49P

- Ⓐ Model No.
- Ⓑ Port size
- Flame-resistant
- Ⓒ Port thread
- Ⓓ Option
- Ⓔ Display unit *9
- Ⓕ Pipe adaptor set (included)
- Ⓖ Other attachments

* Refer to page 30 for the explanation of the option.

Code		Description	Ⓐ Model No. W3000	W4000	W8000
Ⓑ Port size					
8		1/4	●	●	
10		3/8	●	●	
15		1/2		●	
20		3/4			●
25		1			●
Ⓒ Port thread					*1
Blank		Rc thread	●	●	●
N		NPT thread	●	●	●
G		G thread	●	●	●
Ⓓ Option					*2
Drain discharge *3	Blank	Manual drain cock	●	●	●
	F	Auto-drain, man OVRD (NO: no press→Exhaust)	●	●	●
	F1	Auto-drain, man OVRD (NC: no press→no exhaust)	●	●	●
	FF	Large auto-drain, man OVRD (NO: no press→Exhaust)			●
	FF1	Large auto-drain, man OVRD (NC: no press→no exhaust)			●
Bowl material	Blank	Metal bowl (resin cock)	●	●	●
	M	Metal bowl (metal cock)	●	●	●
Element	Blank	5 μm	●	●	●
	Y	0.3 μm (submicron) *4	●	●	●
Pressure range	Blank	0.05 to 0.85 MPa	●	●	●
	L	0.05 to 0.35 MPa *5	●	●	●
Pressure relief	Blank	With relief mechanism	●	●	●
	N	Non-relief	●	●	●
Pressure gauge	T	No pressure gauge (gauge port (1/4) is assembled sealed)	●	●	●
	T8	Pressure gauge ready (gauge port (1/4) is left open)	●	●	●
Flow direction	Blank	Standard flow (left → right)	●	●	●
	X1	Reverse flow (right → left)	●	●	●
Ⓔ Display unit					
Blank		MPa display (Rc thread), psi display (NPT thread), bar display (G thread)	●	●	●
J1		MPa display (NPT, G thread)	●	●	●
Ⓕ Pipe adaptor set (included)					*6 Page 350
Blank		Not included	●	●	●
A8*W		1/4 pipe adaptor set (white)	●	●	
A10*W		3/8 pipe adaptor set (white)	●	●	
A15*W		1/2 pipe adaptor set (white)	●	●	
A20*W		3/4 pipe adaptor set (white)		●	●
A25*W		1 pipe adaptor set (white)			●
A32*W		1 1/4 pipe adaptor set (white)			●
*** Adaptor thread**					
Blank		Rc thread	●	●	●
N		NPT thread	●	●	●
G		G thread	●	●	●
Ⓖ Other attachments					*8 Pages 346, 363
Blank		Not included	●	●	●
BW		C type bracket (silver)	●	●	●
B3W	*7	L type bracket (silver)	●	●	
G49P		G49D-8-P10(L:G49D-8-P04)	●	●	●
G59P		G59D-8-P10(L:G59D-8-P10)	●	●	●

⚠ Precautions for model No. selection

*1: G threads and NPT threads are available for IN, OUT, gauge port and drain outlet (metal bowl (metal cock) with auto-drain).
*2: Select options for the drainage, bowl material, element, and regulator.
When selecting options for several items, list options in order from the top.
*3: Refer to page 354 for the auto-drain usage conditions.
*4: Refer to page 268 for max. processing flow rate when option "Y" is selected.
*5: The pressure gauge's indication range is 0 to 0.4 MPa for the option "L".
*6: The pipe adaptor set and C type bracket cannot be used together.
*7: For details on mounting the L type bracket, refer to (2. Regulator) of "⚠ Cautions and Installation & Adjustment" (page 357).
*8: The pressure gauge (included) can be selected only when Ⓒ Port thread is Rc thread.
*9: Display unit options when selecting NPT threads: If Blank is selected, the pressure unit is psi and the temperature display unit is °F.
When G thread and Blank display unit option are selected, the pressure unit will be bar and the temperature display unit will be °C.
When NPT/G thread and "J1" display unit option are selected, the pressure unit will be MPa and the temperature display unit will be °C.

Flow characteristics

● W3000-8-G4

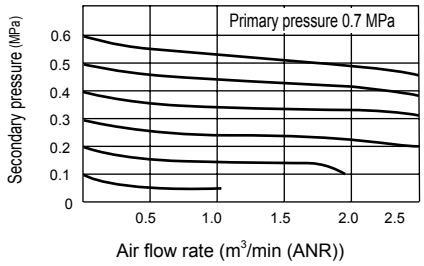

● W3000-10-G4

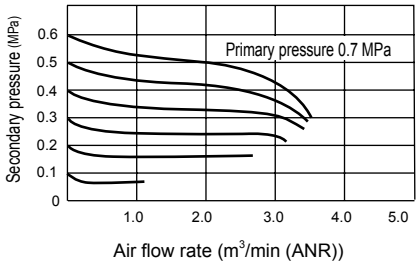

● W4000-8-G4

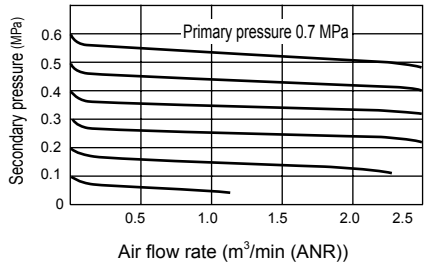

● W4000-10-G4

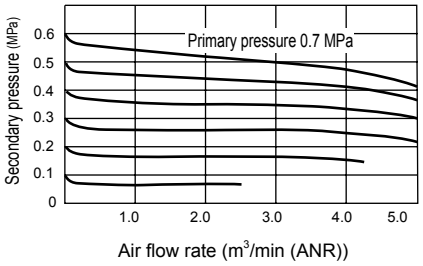

● W4000-15-G4

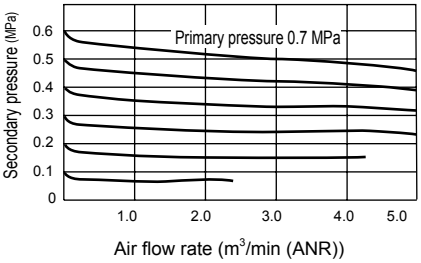

● W8000-20-G4

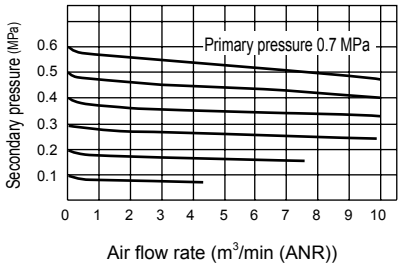

● W8000-25-G4

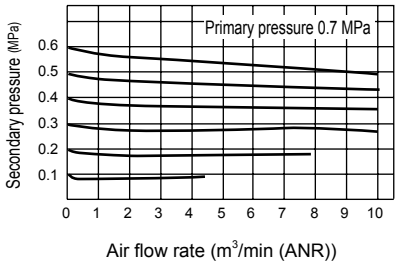

Pressure characteristics

● W3000-G4

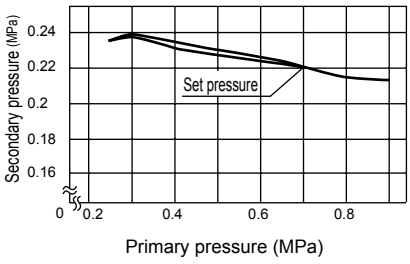

● W4000-G4

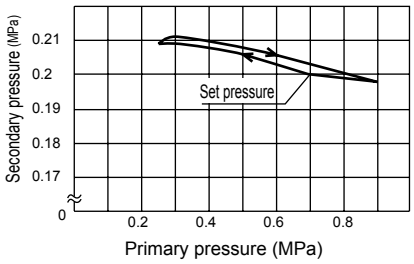

● W8000-G4

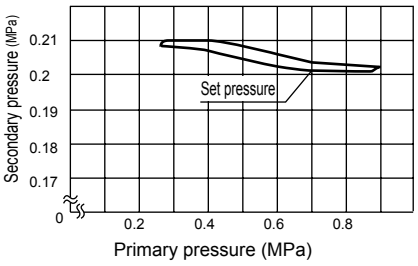

Internal structure and parts list

● W3000-G4

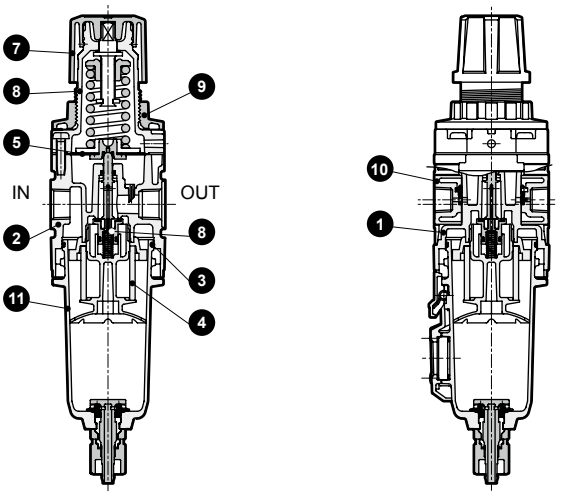

● W4000-G4

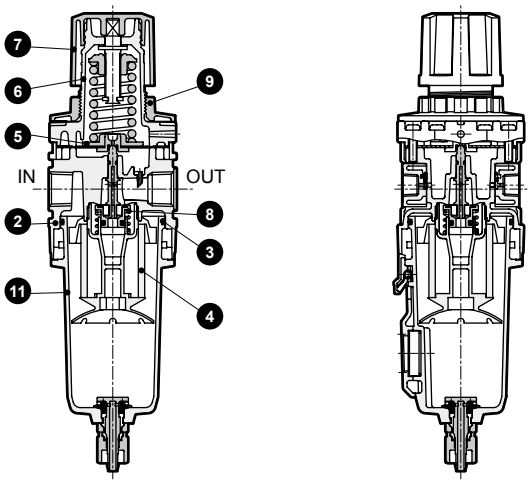

● W8000-G4

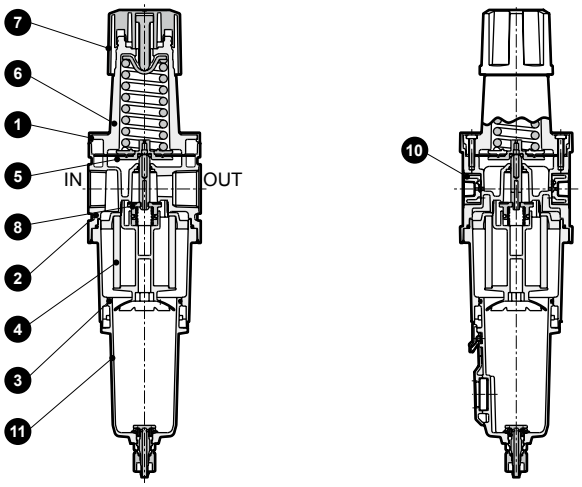

No.	Part name	Material		
		W3000-G4	W4000-G4	W8000-G4
1	Plate cover	ABS resin (*1)		
2	Body	Aluminum alloy die-casting		
3	O-ring	Special nitrile rubber		
4	Element	Polypropylene		
5	Diaphragm assembly	Zinc alloy die-casting/nitrile rubber		
6	Cover	Aluminum alloy die-casting		
7	Knob	PBT resin (*1)		
8	Valve assembly	Copper alloy, hydrogenated nitrile rubber (polyacetal resin: W3000, 4000)		
9	Mounting nut	PBT resin (*1)		-
10	Gauge plug assembly	Polyamide resin (*1), nitrile rubber, steel		
11	Bowl assembly	Aluminum alloy die-casting, PBT resin (*1), glass, nitrile rubber, steel, polyacetal resin, urethane resin		

*1: Flame-resistant resin, UL94 Standards V-0 or equivalent

F.R.L.
F.R.
F (Filtr)
R (Reg)
L (Lub)
Drain Separ
Mech Press SW
Res press exh valve
SlowStart
Anti-bac/Bac-remove Filt
Film Resist FR
Oil-ProhR
Med Press FR
No Cu/ PTFE FRL
Outdrs FRL
Adapter Joiner
Press Gauge
CompFRL
LgFRL
PrecsR
VacF/R
Clean FR
ElecPneuR
AirBoost
Speed Ctrl
SiIncr
CheckV/ other
Fit/Tube
Nozzle
Air Unit
PrecsCompn
Electro Press SW
ContactSW
AirSens
PresSW Cool
Air Flo Sens/Ctrl
WaterRtSens
TotAirSys (Total Air)
TotAirSys (Gamma)
Gas generator
RefrDry
DesicDry
HiPolymDry
MainFiltr
Dischrg etc
Ending

Dimensions

CAD

● W3000-G4

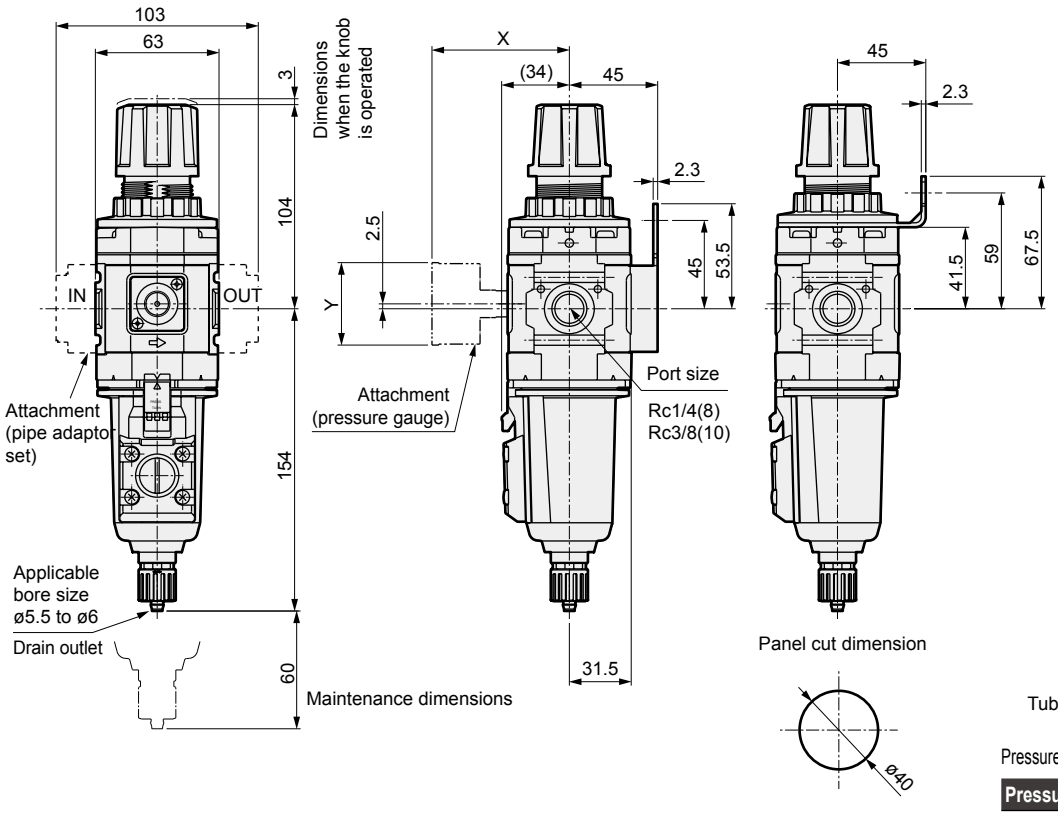

Panel plate thickness: max. 6 mm

· Attachment
C type bracket (-BW)
Part model No.: B320
· Material: Steel
Zinc plated

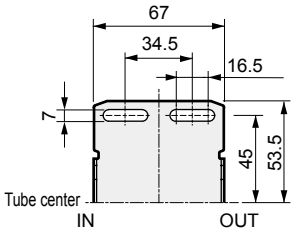

L type bracket (-B3W)
Part model No.: B330
· Material: Steel
Zinc plated

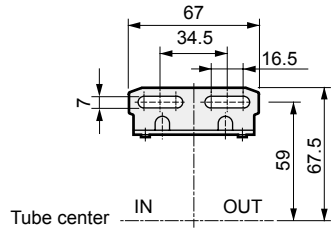

Pressure gauge attached optional dimensions table

Pressure gauge	X	Y
G49P	(69.5)	ø43.5
G59P	(72)	ø52

· For the metal bowl (resin cock), the dimensions of the manual drain cock and the auto-drain manual override are the same.
Note: The C type bracket and pipe adaptor set attachments cannot be used together.

● W4000-G4

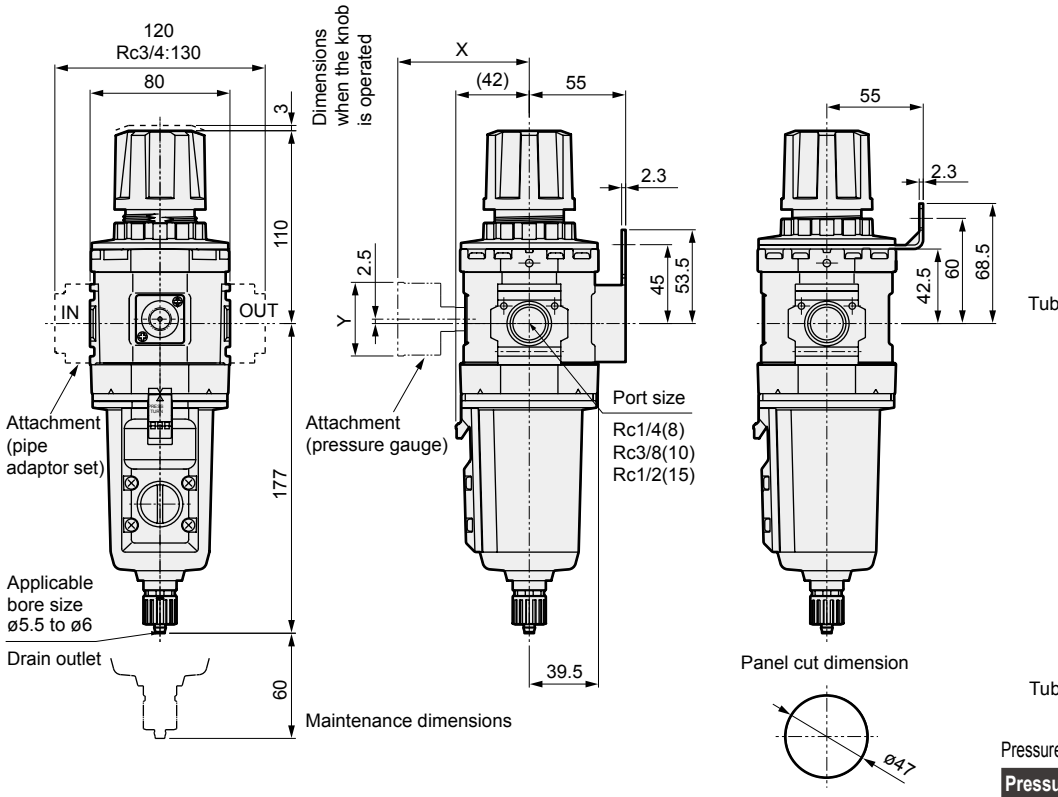

Panel plate thickness: max. 4 mm

· Attachment
C type bracket (-BW)
Part model No.: B420
· Material: Steel
Zinc plated

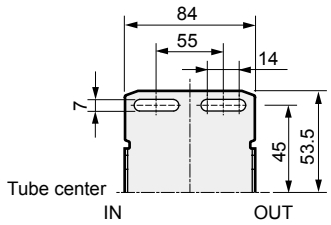

L type bracket (-B3W)
Part model No.: B430
· Material: Steel
Zinc plated

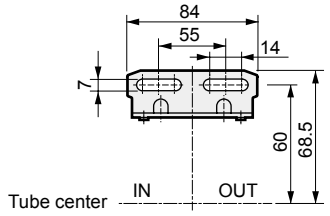

Pressure gauge attached optional dimensions table

Pressure gauge	X	Y
G49P	(74.5)	ø43.5
G59P	(77)	ø52

· For the metal bowl (resin cock), the dimensions of the manual drain cock and the auto-drain manual override are the same.
Note: The C type bracket and pipe adaptor set attachments cannot be used together.

Dimensions

● W8000-G4

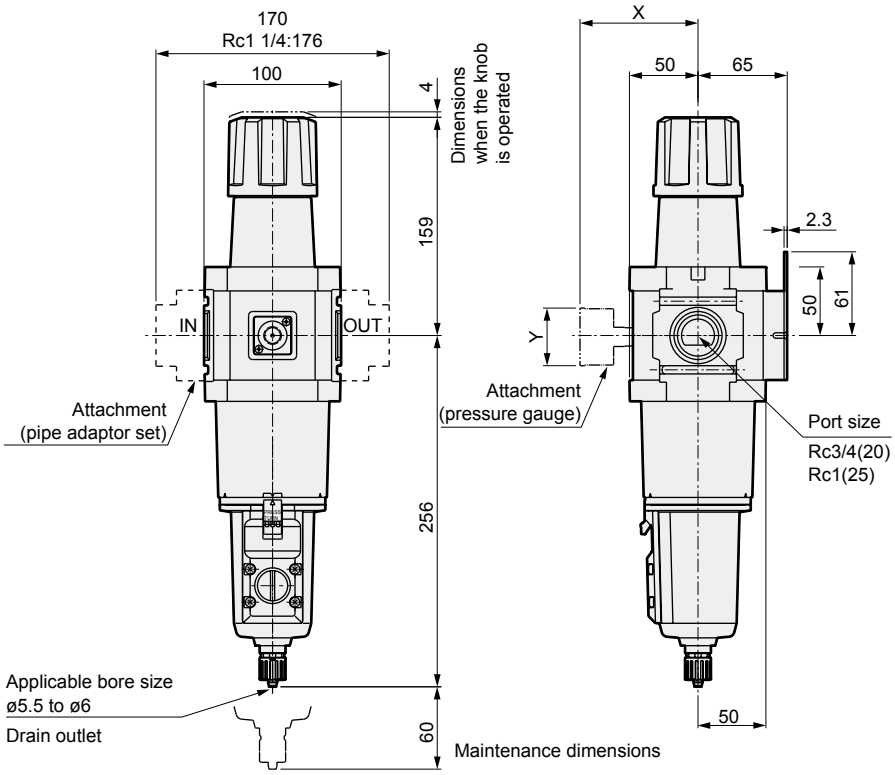

· Attachment
C type bracket (-BW)
Part model No.: B820
· Material: Steel
Zinc plated

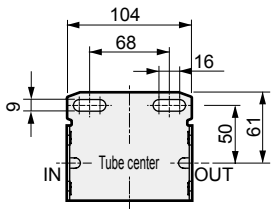

· For the metal bowl (resin cock), the dimensions of the manual drain cock and the auto-drain manual override are the same.
Note: The C type bracket and pipe adaptor set attachments cannot be used together.

Pressure gauge attached optional dimensions table

Pressure gauge	X	Y
G49P	(84.5)	ø43.5
G59P	(87)	ø52

Optional dimensions

● Metal bowl (metal cock) W3000/4000/8000-G4

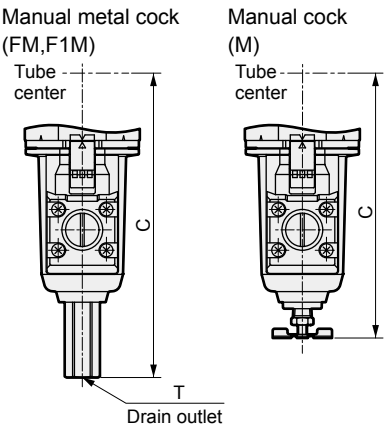

Dimensions table

Model No.	With auto-drain		Manual cock
	C	T	C
W3000-G4	164	Rc1/4	143.5
W4000-G4	187	Rc1/4	166.5
W8000-G4	266	Rc1/4	245.5

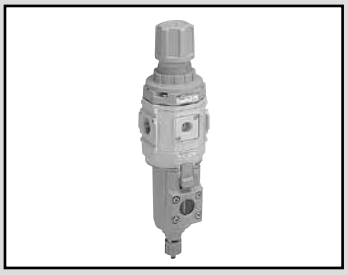

Reverse filter and regulator Flame-resistant series

W3100/W4100/W8100-G4 Series

Introducing the 5 µm dust removing element and 0.3 µm tar removing element with reverse flow function to the lineup.

● Port size: 1/4 to 1

JIS symbol

Specifications

Item		W3100-G4	W4100-G4	W8100-G4
Working fluid		Compressed air		
Max. working pressure	MPa	1.0 (≈150 psi, 10 bar) (*2, *3)		
Proof pressure	MPa	1.5 (≈220 psi, 15 bar)		
Ambient / fluid temperatures	°C	5 (41°F) to 60 (140°F)		
Filtration rating	µm	5 or 0.3		
Set pressure (*1)	MPa	0.05 (≈7.3 psi, 0.5 bar) to 0.85 (≈120 psi, 8.5 bar)		
Pressure relief		With relief mechanism		
Drain capacity	cm^3	45	80	80 (*4)
Port size	Rc,NPT,G	1/4, 3/8 (1/2 uses an adaptor)	1/4, 3/8, 1/2 (3/4 uses an adaptor)	3/4, 1 (1 1/4 uses an adaptor)
Weight	kg	0.72	1.08	2.16
Standard specifications		Exterior: Flame-resistant material, metal bowl		

*1: Refer to the set pressure range for the back pressure given on page 260 when selecting the model.
*2: In the case of "F" with auto-drain, the min. working pressure of auto-drain is 0.1 MPa.
Air is purged with initial drain until pressure reaches 0.1 MPa.
*3: In the case of "F1" with auto-drain, the min. working pressure of auto-drain is 0.15 MPa.
*4: Up to $170m^3$ is stored with the manual drain cock only.
*5: Check that the primary pressure is at least 0.05 MPa more than the secondary pressure.

Option weight

* Add to the weight of the standard accessories.

Unit: kg

Code	Drain discharge				Bowl material	Press.gauge	Pipe adaptor set					
	F	F1	FF	FF1	M	T*	A8*W	A10*W	A15*W	A20*W	A25*W	A32*W
W3100-G4	0.02	0.02			0	0	0.16	0.16	0.16			
W4100-G4	0.02	0.02			0	0	0.16	0.16	0.16	0.16		
W8100-G4	0.02	0.02	0.02	0.02	0	0				0.53	0.53	0.53

Code	Attachment			
	BW	B3W	G49P	G59P
W3100-G4	0.17	0.07	0.086	0.115
W4100-G4	0.21	0.11	0.086	0.115
W8100-G4	0.36		0.086	0.115

How to order

W3100 - 8 ◯ - G4 - T8 - ◯ - A8W G49P

- Ⓐ Model No. — W3100
- Ⓑ Port size — 8
- Flame-resistant — G4
- Ⓒ Port thread — ◯
- Ⓓ Option — T8
- Ⓔ Display unit *10 — ◯
- Ⓕ Pipe adaptor set (included) — A8W
- Ⓖ Other attachments — G49P

* Refer to page 30 for the explanation of the option.

Code		Description	Ⓐ Model No. W3100	W4100	W8100
Ⓑ Port size					
8		1/4	●	●	
10		3/8	●	●	
15		1/2		●	
20		3/4			●
25		1			●
Ⓒ Port thread					*1
Blank		Rc thread	●	●	●
N		NPT thread	●	●	●
G		G thread	●	●	●
Ⓓ Option					*2, *3
Drain discharge *4	Blank	Manual drain cock	●	●	●
	F	Auto-drain, man OVRD (NO: no press→Exhaust)	●	●	●
	F1	Auto-drain, man OVRD (NC: no press→no exhaust)	●	●	●
	FF	Large auto-drain, man OVRD (NO: no press→Exhaust)			●
	FF1	Large auto-drain, man OVRD (NC: no press→no exhaust)			●
Bowl material	Blank	Metal bowl (resin cock)	●	●	●
	M	Metal bowl (metal cock)	●	●	●
Element	Blank	5 μm	●	●	●
	Y	0.3 μm (submicron) *5	●	●	●
Pressure range	Blank	0.05 to 0.85 MPa	●	●	●
	L	0.05 to 0.35 MPa *6	●	●	●
Pressure relief	Blank	With relief mechanism	●	●	●
	N	Non-relief	●	●	●
Pressure gauge	T	No pressure gauge (gauge port (1/4) is assembled sealed)	●	●	●
	T8	Pressure gauge ready (gauge port (1/4) is left open)	●	●	●
Flow direction	Blank	Standard flow (left → right)	●	●	●
	X1	Reverse flow (right → left)	●	●	●
Ⓔ Display unit					
Blank		MPa display (Rc thread), psi display (NPT thread), bar display (G thread)	●	●	●
J1		MPa display (NPT, G thread)	●	●	●
Ⓕ Pipe adaptor set (included)					Page 350 *7
Blank		Not included	●	●	●
A8*W		1/4 pipe adaptor set (white)	●	●	
A10*W		3/8 pipe adaptor set (white)	●	●	
A15*W		1/2 pipe adaptor set (white)	●	●	
A20*W		3/4 pipe adaptor set (white)		●	●
A25*W		1 pipe adaptor set (white)			●
A32*W		1 1/4 pipe adaptor set (white)			●
*** Adaptor thread**					
Blank		Rc thread	●	●	●
N		NPT thread	●	●	●
G		G thread	●	●	●
Ⓖ Other attachments					Pages 346, 363 *9
Blank		Not included	●	●	●
BW		C type bracket (silver)	●	●	●
B3W	*8	L type bracket (silver)	●	●	
G49P		G49D-8-P10(L:G49D-8-P04)	●	●	●
G59P		G59D-8-P10(L:G59D-8-P04)	●	●	●

⚠ Precautions for model No. selection

*1: G threads and NPT threads are available for IN, OUT, gauge port and drain outlet (metal bowl (metal cock) with auto-drain).
*2: Select options for the drainage, bowl material, element, and regulator.
When selecting options for several items, list options in order from the top.
***3: Positions of check valve and pressure gauge cannot be changed.**
If the IN and OUT direction must be reversed, indicate "X1" at the end of the option field.
*4: Refer to page 354 for the auto-drain usage conditions.
*5: Refer to page 268 for max. processing flow rate when option "Y" is selected.
*6: The pressure gauge's indication range is 0 to 0.4 MPa for the option "L".
*7: The pipe adaptor set and C type bracket cannot be used together.
*8: For details on mounting the L type bracket, refer to (2. Regulator) of "⚠ Cautions and Installation & Adjustment" (page 357).
*9: The pressure gauge (included) can be selected only when Ⓒ Port thread is Rc thread.
*10: Display unit options when selecting NPT threads: If Blank is selected, the pressure unit is psi and the temperature display unit is °F.
When G thread and Blank display unit option are selected, the pressure unit will be bar and the temperature display unit will be °C.
When NPT/G thread and "J1" display unit option are selected, the pressure unit will be MPa and the temperature display unit will be °C.

F.R.L.
F.R.
F (Filtr)
R (Reg)
L (Lub)
Drain Separ
Mech Press SW
Res press exh valve
SlowStart
Anti-bac/Bac-remove Filt
Film Resist FR
Oil-ProhR
Med Press FR
No Cu/ PTFE FRL
Outdrs FRL
Adapter Joiner
Press Gauge
CompFRL
LgFRL
PrecsR
VacF/R
Clean FR
ElecPneuR
AirBoost
Speed Ctrl
SiIncr
CheckV/ other
Fit/Tube
Nozzle
Air Unit
PrecsCompn
Electro Press SW
ContactSW
AirSens
PresSW Cool
Air Flo Sens/Ctrl
WaterRtSens
TotAirSys (Total Air)
TotAirSys (Gamma)
Gas generator
RefrDry
DesicDry
HiPolymDry
MainFiltr
Dischrg etc
Ending

Flow characteristics

● W3100-8-G4

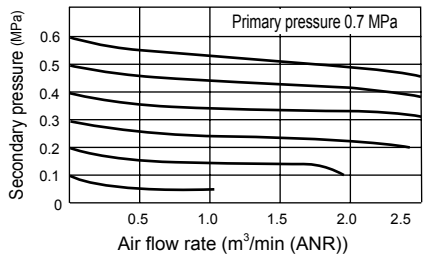

● W3100-10-G4

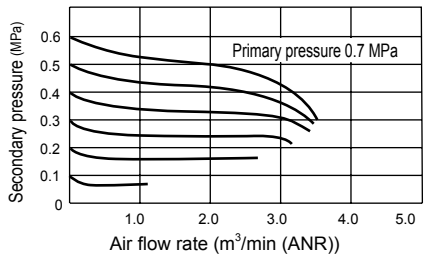

● W4100-8-G4

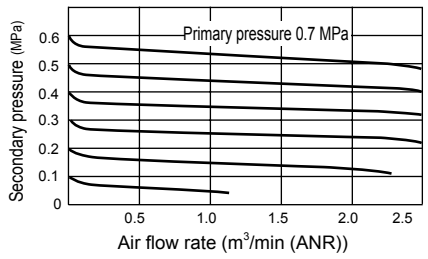

● W4100-10-G4

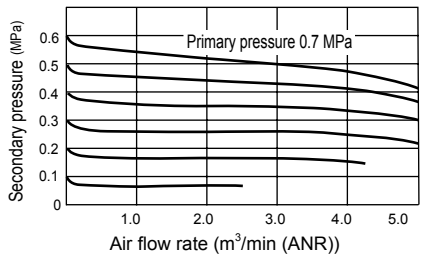

● W4100-15-G4

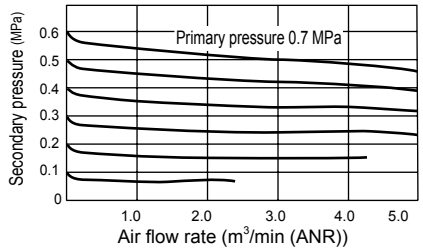

● W8100-20-G4

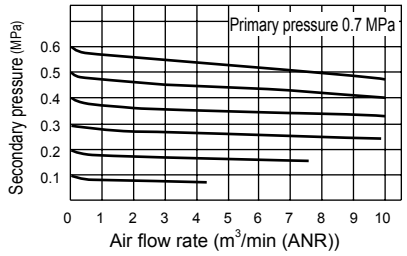

● W8100-25-G4

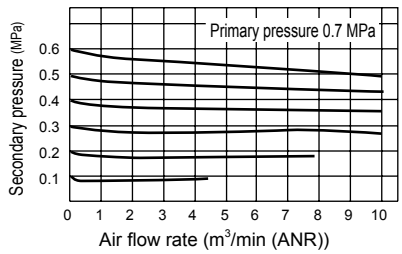

● Set pressure range to back pressure

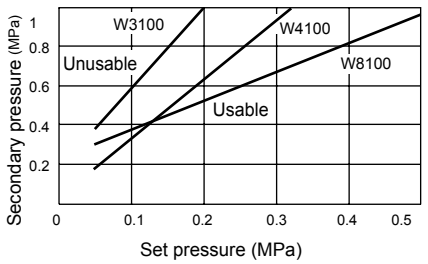

Note: The area above the graph line shows the unusable range and that below the graph line shows the usable range.
Example: If W4100 is set to set pressure 0.2 MPa and the secondary back pressure is 0.6 MPa or more, the secondary pressure will not be released to the primary side.

Pressure characteristics

● W3100-G4

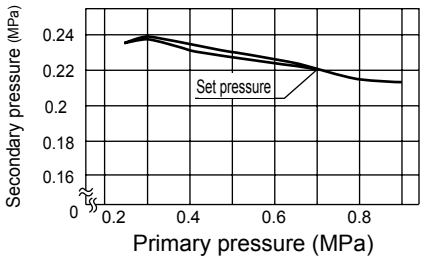

● W4100-G4

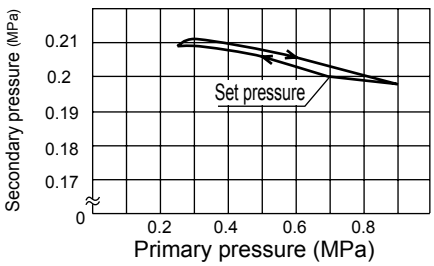

● W8100-G4

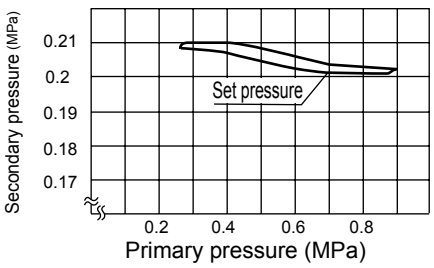

Internal structure and parts list

● W3100-G4

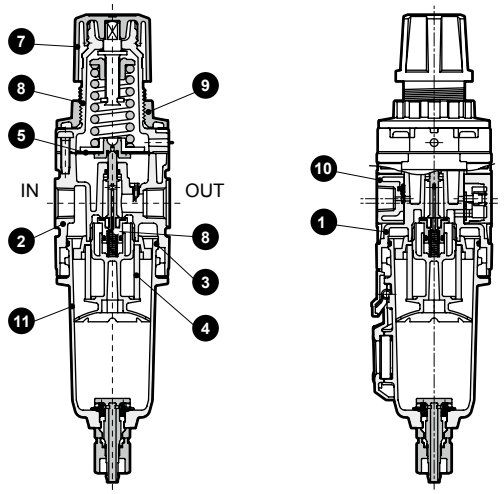

● W4100-G4

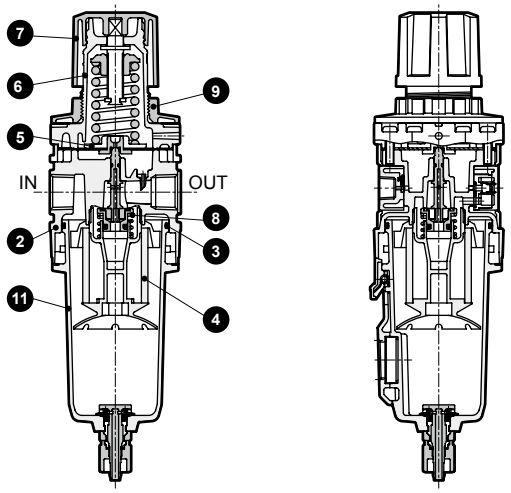

● W8100-G4

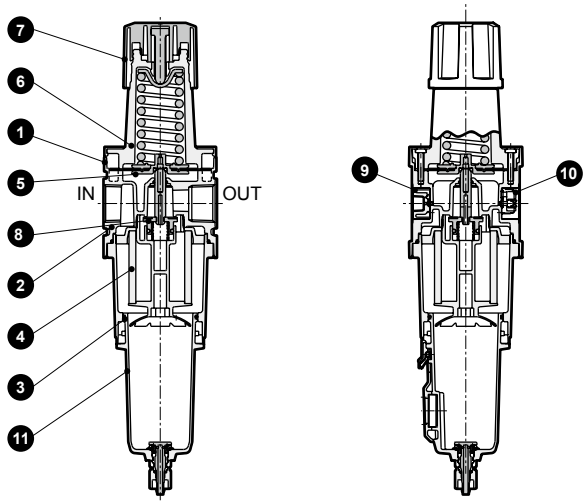

No.	Part name	Material		
		W3100-G4	W4100-G4	W8100-G4
1	Plate cover	ABS resin (*1)		
2	Body	Aluminum alloy die-casting		
3	O-ring	Special nitrile rubber		
4	Element	Polypropylene		
5	Diaphragm assembly	Zinc alloy die-casting, nitrile rubber		
6	Cover	Aluminum alloy die-casting		
7	Knob	PBT resin (*1)		
8	Valve assembly	Copper alloy, hydrogenated nitrile rubber (polyacetal resin: W3100, 4100)		
9	Gauge plug assembly	Polyamide resin (*1), nitrile rubber, steel		
10	Check valve total assembly	PBT resin, nitrile rubber, stainless steel wire, steel, aluminum		
11	Bowl assembly	Al alloy die-cast, PBT resin (*1), glass, nitrile rubber, steel, POM resin, URE resin		
12	Mounting nut	PBT resin (*1)		-

*1 : Flame-resistant resin, UL94 Standards V-0 or equivalent
*2 : Refer to page 264 for repair parts kit model No.

Functions

When the primary pressure is introduced from the IN side, the check valve functions as a regular regulator because it closes with primary pressure and spring load. When primary pressure is released by a switching valve such as a residual pressure exhaust valve, the check valve opens with secondary pressure. Pressure in the diaphragm chamber is released and pressure drops. This causes the diaphragm to be pressed down by the pressure adjustment spring. The main valve (valve assembly) opens, and the air on the OUT side is discharged.

Note: When the primary side pressure is released, back pressure A must be equal to or less than the set pressure range of the regulator corresponding to the back pressure shown in the graph. (Refer to page 260 for the graph)

● Circuit diagram

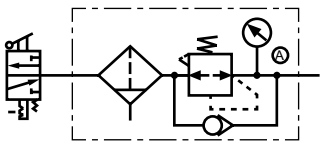

When using residual pressure exhaust valve in front of reverse filter and regulator.

Dimensions

● W3100-G4

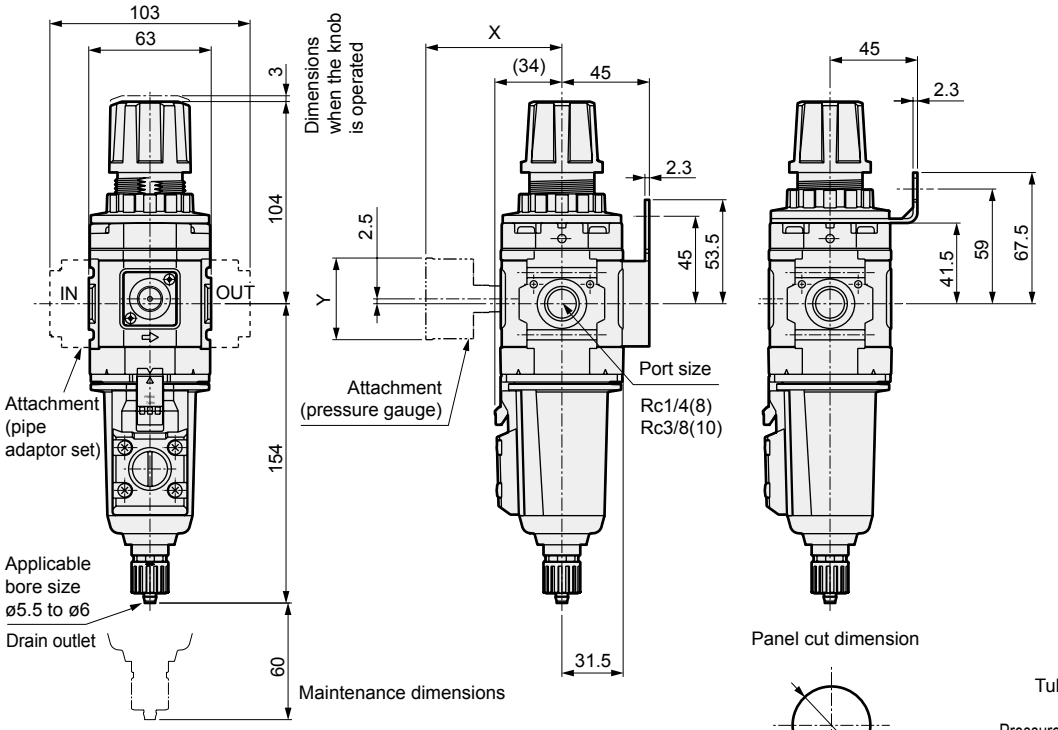

Panel plate thickness: max. 6 mm

· Attachment
C type bracket (-BW)
Part model No.: B320
· Material: Steel
Zinc plated

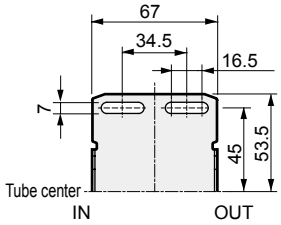

L type bracket (-B3W)
Part model No.: B330
· Material: Steel
Zinc plated

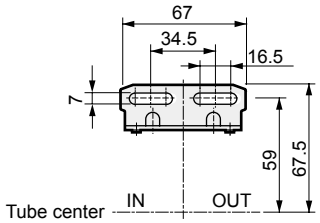

Pressure gauge attached optional dimensions table

Pressure gauge	X	Y
G49P	(69.5)	ø43.5
G59P	(72)	ø52

· For the metal bowl (resin cock), the dimensions of the manual drain cock and the auto-drain manual override are the same.
Note: The C type bracket and pipe adaptor set attachments cannot be used together.

● W4100-G4

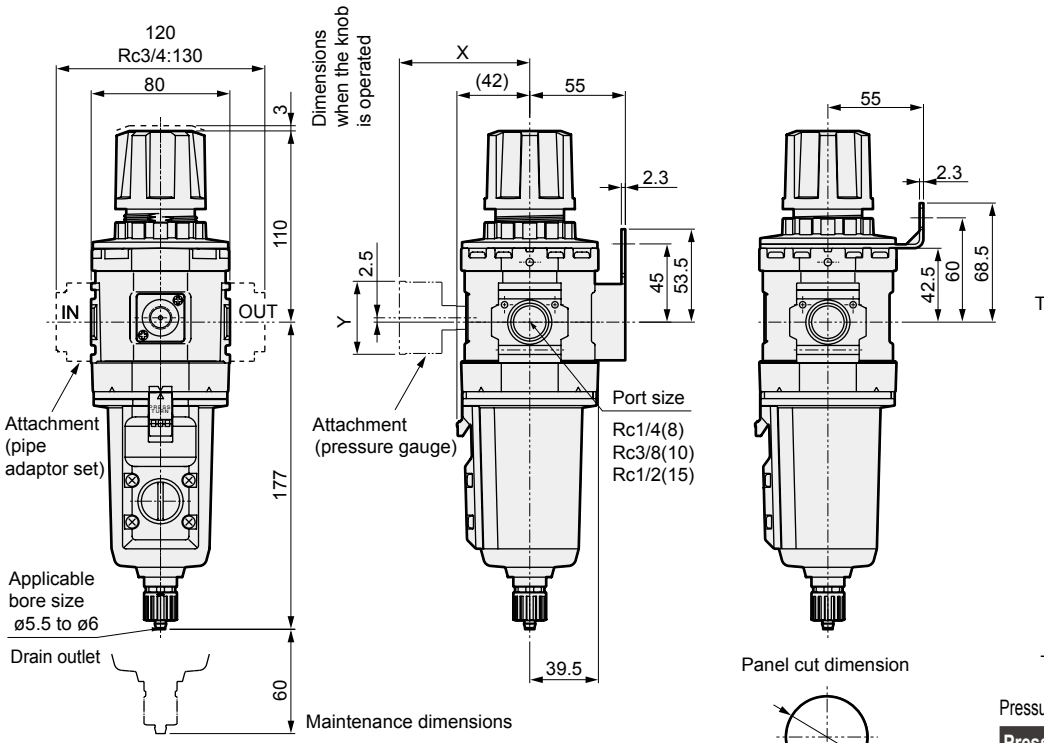

Panel plate thickness: max. 4 mm

· Attachment
C type bracket (-BW)
Part model No.: B420
· Material: Steel
Zinc plated

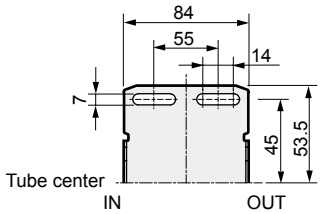

L type bracket (-B3W)
Part model No.: B430
· Material: Steel
Zinc plated

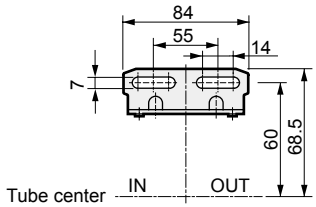

Pressure gauge attached optional dimensions table

Pressure gauge	X	Y
G49P	(74.5)	ø43.5
G59P	(77)	ø52

· For the metal bowl (resin cock), the dimensions of the manual drain cock and the auto-drain manual override are the same.
Note: The C type bracket and pipe adaptor set attachments cannot be used together.

Dimensions

● W8100-G4

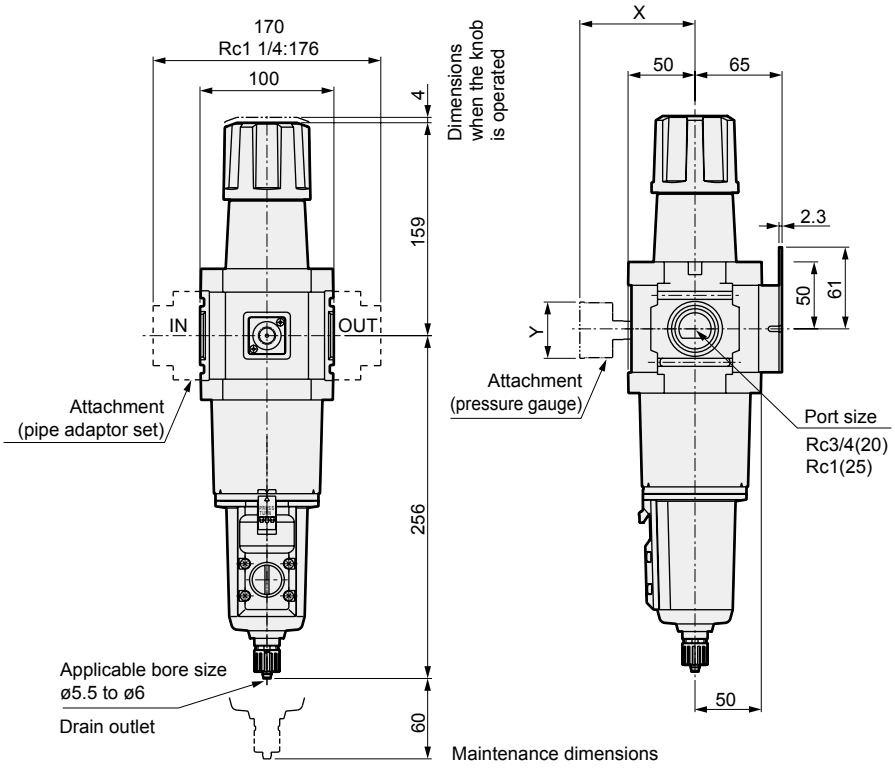

· Attachment
C type bracket (-BW)
Part model No.: B820
· Material: Steel
Zinc plated

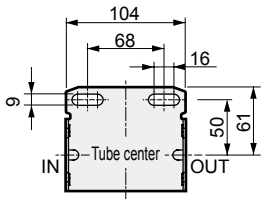

· For the metal bowl (resin cock), the dimensions of the manual drain cock and the auto-drain manual override are the same.
Note: The C type bracket and pipe adaptor set attachments cannot be used together.

Pressure gauge attached optional dimensions table

Pressure gauge	X	Y
G49P	(84.5)	ø43.5
G59P	(87)	ø52

Optional dimensions

● Metal bowl (metal cock) W3100-G4/W4100-G4/W8100-G4

Manual metal cock (FM, F1M)

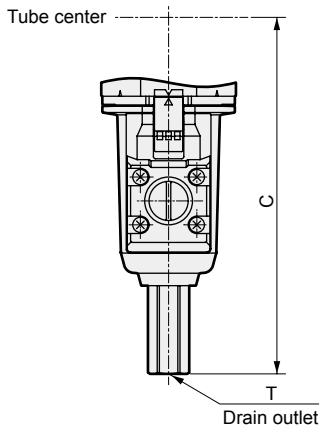

Manual cock (M)

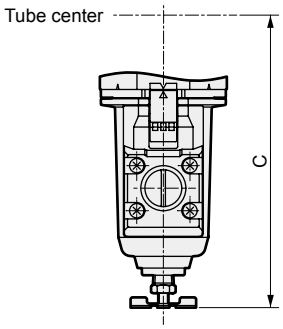

Dimensions table

Model No.	With auto-drain		Manual cock
	C	T	C
W3100-G4	164	Rc1/4	143.5
W4100-G4	187	Rc1/4	166.5
W8100-G4	266	Rc1/4	245.5

Optional parts diagram

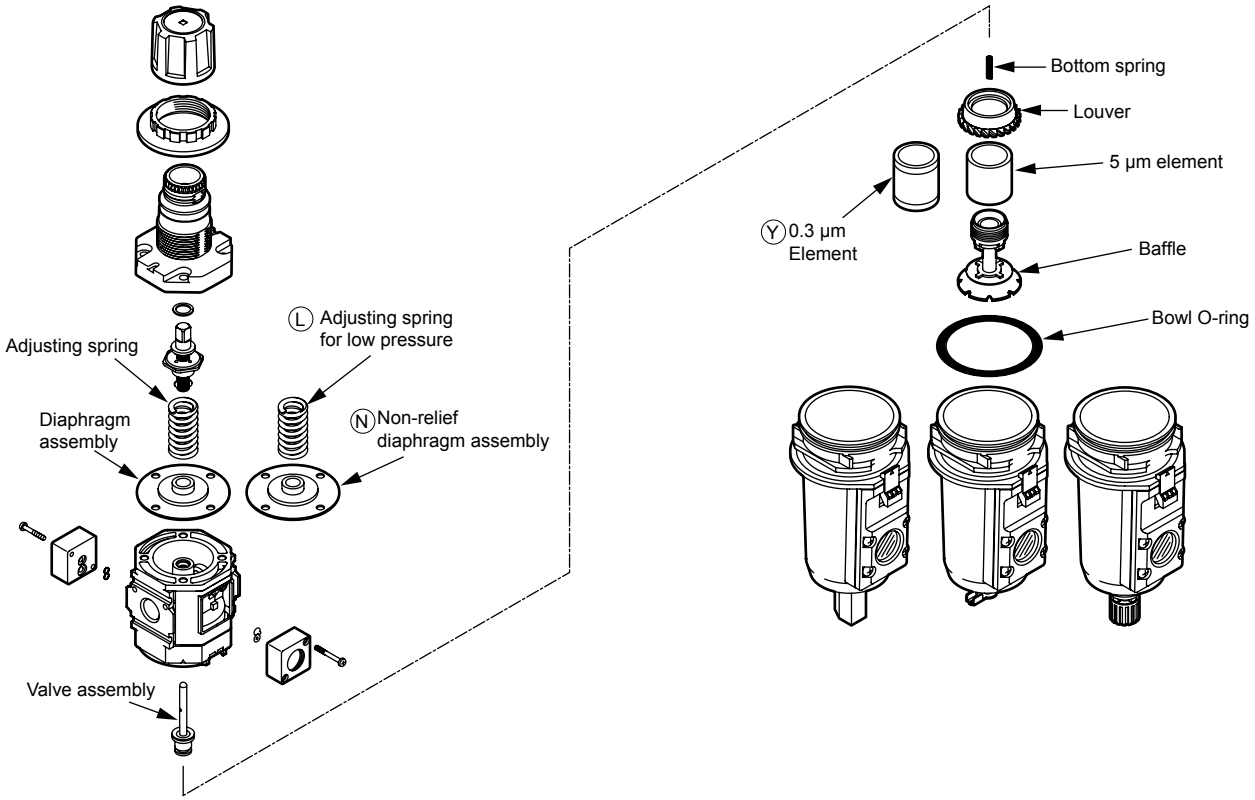

Repair parts kit (set of diaphragm assembly, valve assembly, bottom spring, louver, element, baffle, bowl O-ring)

Repair parts kits model No. / Model	Relief diaphragm 5 μm element (blank)	Non-relief diaphragm 5 μm element (N)	Relief diaphragm 0.3 μm element (Y)	Non-relief diaphragm 0.3 μm element (NY)
W3000-G4,W3100-G4	W3000-KIT	W3000-KIT-N	W3000-KIT-Y	W3000-KIT-NY
W4000-G4,W4100-G4	W4000-KIT	W4000-KIT-N	W4000-KIT-Y	W4000-KIT-NY
W8000-G4,W8100-G4	W8000-KIT	W8000-KIT-N	W8000-KIT-Y	W8000-KIT-NY

Valve assembly (set of valve assembly and bottom spring)

Model	Valve assembly model No.
W3000-G4,W3100-G4	W3000-VALVE-ASSY
W4000-G4,W4100-G4	W4000-VALVE-ASSY
W8000-G4,W8100-G4	W8000-VALVE-ASSY

* Refer to the regulator options and parts table (page 286) for details on the adjusting spring, diaphragm, check valve assembly for reverse regulator, and gauge plug assembly. Refer to the air filter options and parts table (page 272) for details on the element and bowl assembly.